Technical Data Compressor

SECOP

Model

Designation	**NLE12.6CNL**	**220-240V/50Hz 1~**	Sales code:	**105H6378**

Compressor design

Oil type	Polyolester	Refrigerant(s)	**R290**
Oil viscosity	32cSt	Displacement	12,55cm³ / 0,77cu.in
Oil quantity	298cm³ / 10,1fl.oz	Compressors on pallet	80
Refr. charge - tech. limit	300g / 10,6oz		
Free gas volume comp.	2360cm³ / 79,8fl.oz		
Weight	11,8kg / 26lbs		
Motor protection	1# internal		
Winding resistance main	5,9Ω (at 25°C)		
Winding resistance aux	10,8Ω (at 25°C)		
Max. winding temp.	125°C / 257°F		
Max. discharge temp.	130°C / 266°F		

General - Configurations with NLE12.6CNL

	Conf. 1	**Conf. 2**	**Conf. 3**
Motor configuration	CSIR	eRSIR	eRSCR
Power supply (nominal)	220-240V/50Hz	220-240V/50Hz	220-240V/50Hz
Number of phases	1	1	1
Voltage range	198-254V	198-254V	198-254V
Approvals	VDE, CCC	VDE, CCC	VDE, CCC
Starting torque	HST	LST	LST
Note	- / -		

Applications with NLE12.6CNL

	Conf. 1	**Conf. 2**	**Conf. 3**
Refrigerant	R290	R290	R290
Application	LBP	LBP	LBP
System cooling	fan 3m/s	fan 3m/s	fan 3m/s
Hot gas defrost	OK	OK	OK
Long interval pull down	OK	OK	-/-

Electrical data - Configurations with NLE12.6CNL

	Conf. 1	**Conf. 2**	**Conf. 3**
Starting device type	relay	e-PTC	e-PTC
Run capacitor	-/-	-/-	4µF
Start capacitor	80µF	-/-	-/-
LRA (locked rotor amps / 4s/ U(N))	14,2A		15,3A
RLA (rated load amps / 1s/ U(N))	2,7A	-/-A	2,7A
Cut in current (U(N))	14,2A		19,2A

Model

Designation **NLE12.6CNL** **220-240V/50Hz 1~** Sales code: **105H6378**

Compressor dimensions

Housing		
	A Height	203mm / 7,99in
	B Height	197mm / 7,76in
	C Length shell	205mm / 8,07in
	D Length w. cover	254mm / 10in
	E Width	166mm / 6,54in

Connectors		**Suction X**	**Discharge Y**	**Process Z**
Diameter	[mm]	øi 8,11-8,29	øi 6,11-6,29	øi 6,11-6,29
(i:inside, o:outside)	[in]	øi 0,32-0,33	øi 0,24-0,25	øi 0,24-0,25
Material		copper	copper	copper
Horizontal angle	±2°	0°	0°	0°
Vertical angle	±2°	15°	21°	155°
Position l/h/w	[mm]	132/69/57	94/102/81	-109/94/72
	[in]	5,2/2,7/2,2	3,7/4/3,2	-4,3/3,7/2,8
Straight tube l.	[mm]	12	12	12
	[in]	0,5	0,5	0,5

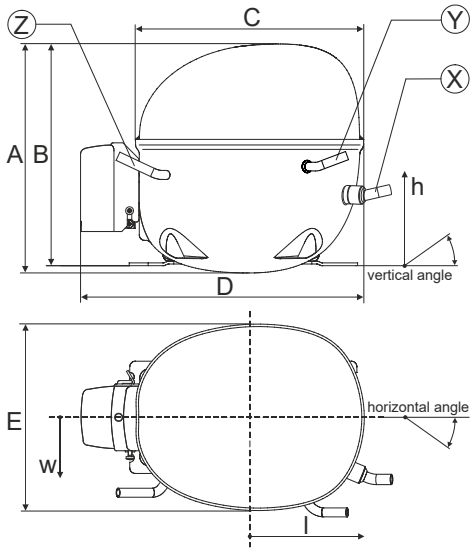

Compressor fixation

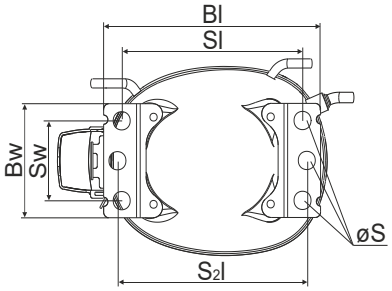

Baseplate	[mm]	[inch]
Bl	204	8.03
Bw	100	3.94

Small holes	[mm]	[inch]
Sl	170	6.7
Sw	70	2.76
S2l	178	7
øS	ø 16	ø 0.63

Bolt joint

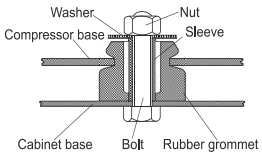

Snap-on

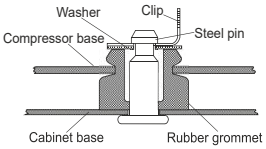

Mounting accessories	one comp.	multi pack
Bolt joint | M6 | ø16mm	118-1917	118-1918
Bolt joint | ø1/4" | ø16mm	118-1946	
Snap-on | ø7,3 | ø16mm	118-1947	118-1919

Application notes

Provision for PE Grounding is located at the PE Stamp on the compressor

Model

Designation	NLE12.6CNL	220-240V/50Hz	Conf. 1	Sales code:	105H6378

Configuration

Motor configuration	CSIR
Power supply (nominal)	220-240V/50Hz 1~
Refrigerant	R290
Application	LBP
Voltage range	198-254V
Starting torque	HST
Approvals	VDE
	CCC

Electrical accessories / wiring diagram

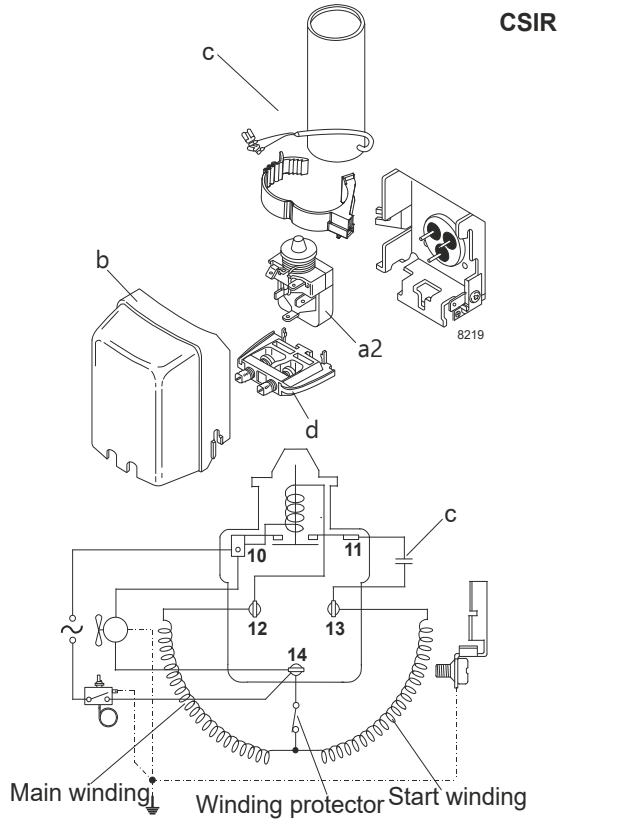

Ambient/ machine room temperatures minimum /maximum

Ambient temperature range:	10 - 43°C / 50 - 110°F
Machine room temperature range:	10 - 48°C / 50 - 119°F
Compressor cooling:	fan 3m/s

Operation pressure range

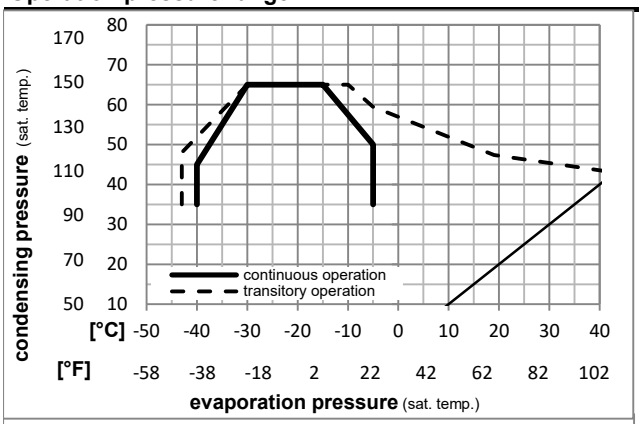

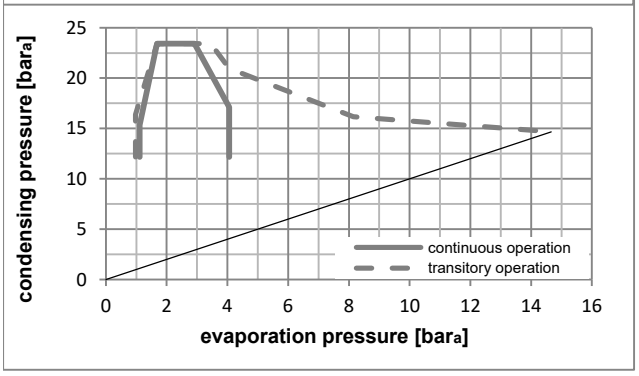

Components

a2	relay	117U7003
c	start capacitor (80µF)	117U5015
b	plastic cover	103N2010
d	cord relief	103N1010

Alternative components

a2	relay	117U7053
c	start capacitor (80µF)	117U5079
b	plastic cover	103N2011

Model

Designation **NLE12.6CNL** **220-240V/50Hz** **Conf. 1** Sales code: **105H6378**

Optimization + standard conditions R290, 220V/50Hz, CSIR, fan 3m/s, VDE, CCC

	pe (Evaporating pressure (saturation temperature))	pc (Condensing pressure (saturation temperature))	RGT (Return gas temp.)	Tliq (Liquid temp.)	Cooling capacity [W]	Cooling capacity [Btu/h]	Cooling capacity [kcal/h]	COP [W/W]	EER [Btu/Wh]	EER [kcal/Wh]	P1 (Power consumption) [W]	I (Current consumption) [A]	ṁ (Ref. mass flow) [kg/h]	
[°C]	-23	54	32	32	609,8	2083	524,8	1,62	5,55	1,40	375,5	2,24	6,18	**ASHRAE LBP**
[°F]	-10	130	90	90										
[°C]	-25	55	32	55	459,7	1570	395,6	1,27	4,33	1,09	362,2	2,19	5,72	**cecomaf LBP**
[°F]	-13	131	90	131										
[°C]	-35	40	20	40	354,2	1210	304,8	1,33	4,55	1,15	265,6	1,87	4,05	**EN12900 LBP**
[°F]	-31	104	68	104										
[°C]	-23	49	4,4	49	493,6	1686	424,8	1,36	4,64	1,17	363,1	2,20	6,84	**ARI540 LBP**
[°F]	-10	120	40	120										
[°C]	-23	41	32	32	659,7	2253	567,8	1,91	6,53	1,65	345,0	2,13	6,68	**AHAM LBP**
[°F]	-10	105	90	90										
[°C]	-35	45	32	45	338,9	1157	291,6	1,25	4,28	1,08	270,4	1,89	3,80	**opt**
[°F]	-31	113	90	113										

Performance tables R290, 220V/50Hz, CSIR, fan 3m/s, VDE, CCC

	pe [°C]	pe [°F]	Cooling capacity [W]	Cooling capacity [Btu/h]	Cooling capacity [kcal/h]	COP [W/W]	EER [Btu/Wh]	EER [kcal/Wh]	P1 [W]	I [A]	m [kg/h]
[°C / °F]	-40	-40	258,9	884	222,8	1,11	3,78	0,95	233,9	1,78	2,89
cond. pressure	-35	-31	338,9	1157	291,6	1,25	4,28	1,08	270,4	1,89	3,80
pc= 45/113	-30	-22	430,1	1469	370,2	1,41	4,80	1,21	306,1	2,00	4,83
return gas temp.	-25	-13	536,4	1832	461,6	1,57	5,36	1,35	341,9	2,12	6,05
RGT= 32/90	-20	-4	661,6	2259	569,4	1,75	5,97	1,50	378,6	2,26	7,49
liquid temp	-15	5	809,3	2764	696,5	1,94	6,63	1,67	417,1	2,41	9,21
Tliq= 45/113	-5	23	1187,9	4057	1022,3	2,36	8,07	2,03	503,0	2,78	13,68
[°C / °F]	-40	-40	215,7	737	185,7	0,91	3,09	0,78	238,1	1,77	2,66
cond. pressure	-35	-31	287,2	981	247,2	1,03	3,52	0,89	279,0	1,90	3,55
pc= 55/131	-30	-22	367,3	1254	316,1	1,15	3,92	0,99	320,1	2,04	4,56
return gas temp	-25	-13	459,7	1570	395,6	1,27	4,33	1,09	362,2	2,19	5,72
RGT= 32/90	-20	-4	568,3	1941	489,1	1,40	4,78	1,20	406,1	2,36	7,11
liquid temp	-15	5	696,7	2379	599,6	1,54	5,25	1,32	452,8	2,55	8,76
Tliq= 55/131	-5	23	1028,4	3512	885,1	1,84	6,30	1,59	557,8	3,00	13,10

Model

Designation	NLE12.6CNL	220-240V/50Hz	Conf. 2	Sales code:	105H6378

Configuration

Motor configuration	eRSIR
Power supply (nominal)	220-240V/50Hz 1~
Refrigerant	R290
Application	LBP
Voltage range	198-254V
Starting torque	LST
Approvals	VDE
	CCC

Electrical accessories / wiring diagram

RSIR

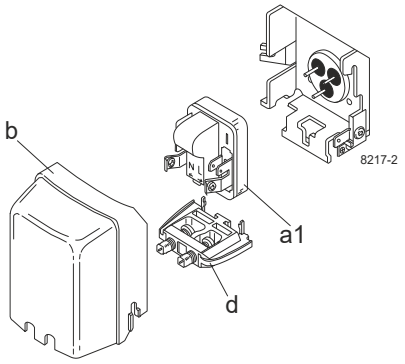

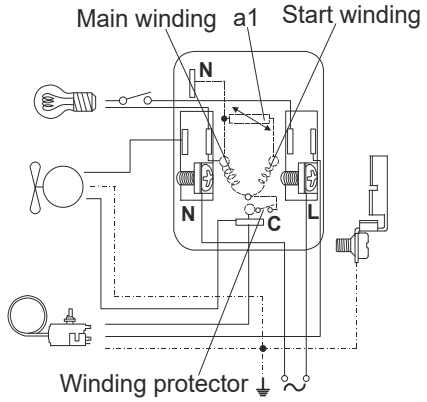

Ambient/ machine room temperatures minimum /maximum

Ambient temperature range:	10 - 43°C / 50 - 110°F
Machine room temperature range:	10 - 48°C / 50 - 119°F
Compressor cooling:	fan 3m/s

Operation pressure range

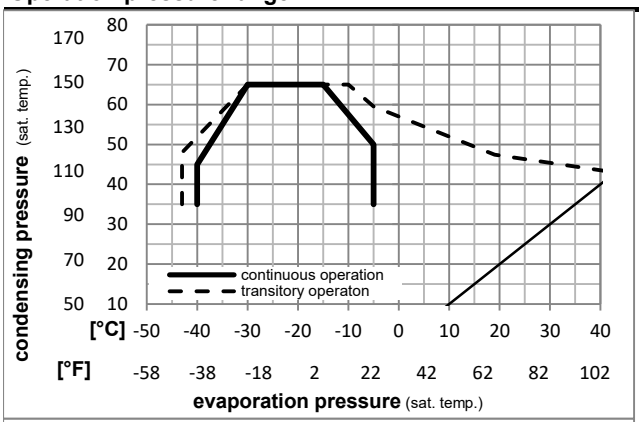

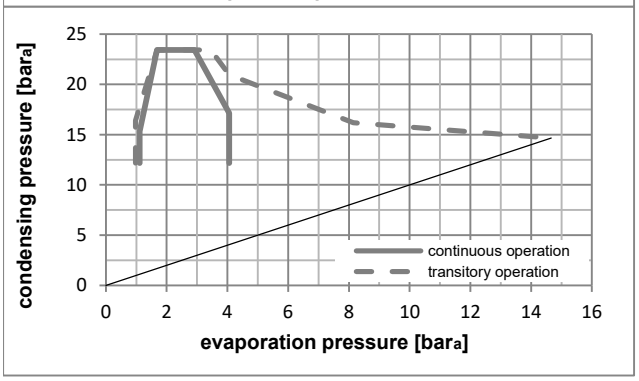

Components

a1	e-PTC starter (220V, 25Ohm, 4.8mm)	103N0050
b	plastic cover	103N2010
d	cord relief	103N1010

Alternative components

b	plastic cover	103N2011

Model

Designation **NLE12.6CNL** **220-240V/50Hz** **Conf. 2** Sales code: **105H6378**

Optimization + standard conditions R290, 220V/50Hz, eRSIR, fan 3m/s, VDE, CCC

	pe (Evaporating pressure (saturation temperature))	pc (Condensing pressure (saturation temperature))	RGT (Return gas temp.)	Tliq (Liquid temp.)	Cooling capacity [W]	[Btu/h]	[kcal/h]	COP [W/W]	EER [Btu/Wh]	[kcal/Wh]	P1 (Power consumption) [W]	I (Current consumption) [A]	ṁ (Ref. mass flow) [kg/h]	
[°C]	-23	54	32	32	609,8	2083	524,8	1,62	5,55	1,40	375,5	2,24	6,18	**ASHRAE LBP**
[°F]	-10	130	90	90										
[°C]	-25	55	32	55	459,7	1570	395,6	1,27	4,33	1,09	362,2	2,19	5,72	**cecomaf LBP**
[°F]	-13	131	90	131										
[°C]	-35	40	20	40	354,2	1210	304,8	1,33	4,55	1,15	265,6	1,87	4,05	**EN12900 LBP**
[°F]	-31	104	68	104										
[°C]	-23	49	4,4	49	493,6	1686	424,8	1,36	4,64	1,17	363,1	2,20	6,84	**ARI540 LBP**
[°F]	-10	120	40	120										
[°C]	-23	41	32	32	659,7	2253	567,8	1,91	6,53	1,65	345,0	2,13	6,68	**AHAM LBP**
[°F]	-10	105	90	90										
[°C]	-35	45	32	45	338,9	1157	291,6	1,25	4,28	1,08	270,4	1,89	3,80	**opt**
[°F]	-31	113	90	113										

Performance tables R290, 220V/50Hz, eRSIR, fan 3m/s, VDE, CCC

	pe [°C]	[°F]	Cooling capacity [W]	[Btu/h]	[kcal/h]	COP [W/W]	EER [Btu/Wh]	[kcal/Wh]	P1 [W]	I [A]	m [kg/h]
[°C / °F]	-40	-40	258,9	884	222,8	1,11	3,78	0,95	233,9	1,78	2,89
cond. pressure	-35	-31	338,9	1157	291,6	1,25	4,28	1,08	270,4	1,89	3,80
pc= 45/113	-30	-22	430,1	1469	370,2	1,41	4,80	1,21	306,1	2,00	4,83
return gas temp.	-25	-13	536,4	1832	461,6	1,57	5,36	1,35	341,9	2,12	6,05
RGT= 32/90	-20	-4	661,6	2259	569,4	1,75	5,97	1,50	378,6	2,26	7,49
liquid temp	-15	5	809,3	2764	696,5	1,94	6,63	1,67	417,1	2,41	9,21
Tliq= 45/113	-5	23	1187,9	4057	1022,3	2,36	8,07	2,03	503,0	2,78	13,68
[°C / °F]	-40	-40	215,7	737	185,7	0,91	3,09	0,78	238,1	1,77	2,66
cond. pressure	-35	-31	287,2	981	247,2	1,03	3,52	0,89	279,0	1,90	3,55
pc= 55/131	-30	-22	367,3	1254	316,1	1,15	3,92	0,99	320,1	2,04	4,56
return gas temp	-25	-13	459,7	1570	395,6	1,27	4,33	1,09	362,2	2,19	5,72
RGT= 32/90	-20	-4	568,3	1941	489,1	1,40	4,78	1,20	406,1	2,36	7,11
liquid temp	-15	5	696,7	2379	599,6	1,54	5,25	1,32	452,8	2,55	8,76
Tliq= 55/131	-5	23	1028,4	3512	885,1	1,84	6,30	1,59	557,8	3,00	13,10

Model

Designation	NLE12.6CNL	220-240V/50Hz	Conf. 3	Sales code:	105H6378

Configuration

Motor configuration	eRSCR
Power supply (nominal)	220-240V/50Hz 1~
Refrigerant	R290
Application	LBP
Voltage range	198-254V
Starting torque	LST
Approvals	VDE
	CCC

Ambient/ machine room temperatures minimum /maximum

Ambient temperature range:	10 - 43°C / 50 - 110°F
Machine room temperature range:	10 - 48°C / 50 - 119°F
Compressor cooling:	fan 3m/s

Operation pressure range

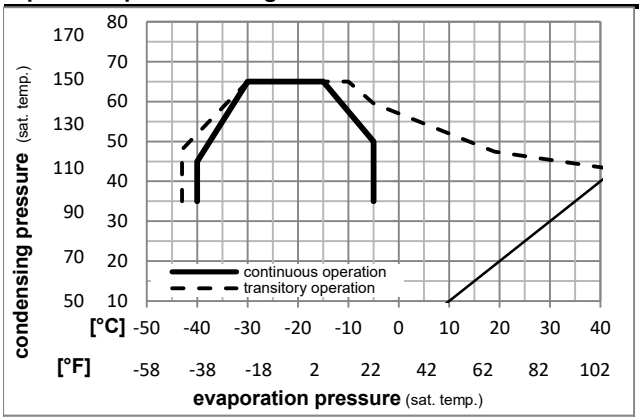

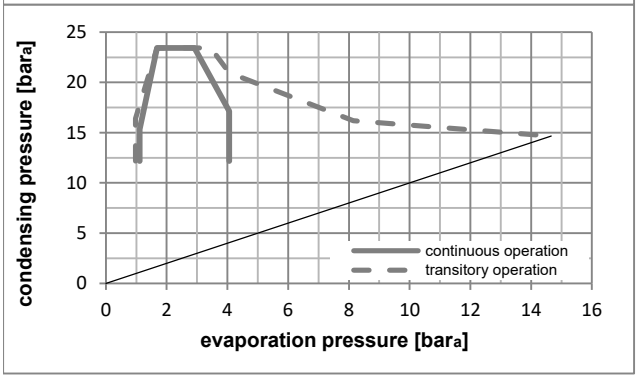

Electrical accessories / wiring diagram

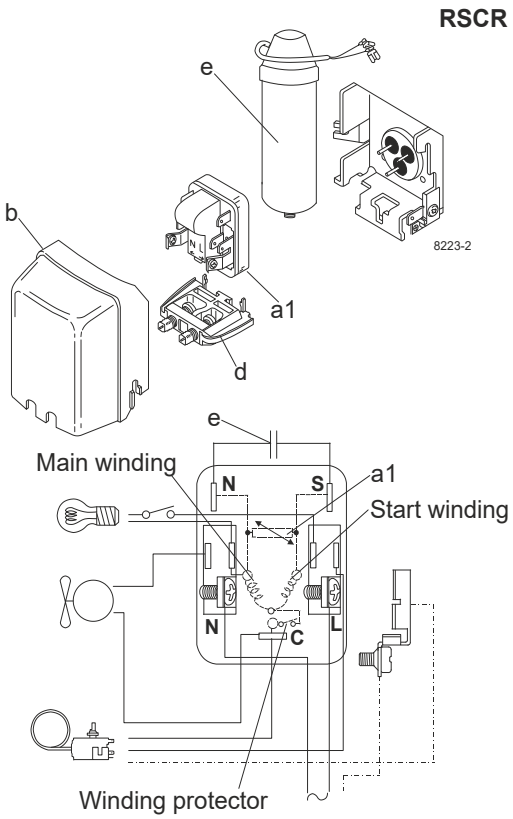

Components

a1	e-PTC starter (220V, 25Ohm, 4.8mm)	103N0050
e	run capacitor (4µF, 4.8mm)	117-7119
b	plastic cover	103N2010
d	cord relief	103N1010
	bracket for run capacitor	117-0300
	screw M4x8mm	117-0301

Alternative components

b	plastic cover	103N2011

Model

Designation **NLE12.6CNL** **220-240V/50Hz** **Conf. 3** Sales code: **105H6378**

Optimization + standard conditions R290, 220V/50Hz, eRSCR, fan 3m/s, VDE, CCC

	pe (Evaporating pressure (saturation temperature))	pc (Condensing pressure (saturation temperature))	RGT (Return gas temp.)	Tliq (Liquid temp.)	Cooling capacity [W]	Cooling capacity [Btu/h]	Cooling capacity [kcal/h]	COP [W/W]	EER [Btu/Wh]	EER [kcal/Wh]	P1 (Power consumption) [W]	I (Current consumption) [A]	ṁ (Ref. mass flow) [kg/h]	
[°C]	-23	54	32	32	613,3	2095	527,8	1,69	5,77	1,45	363,0	2,17	6,21	**ASHRAE LBP**
[°F]	-10	130	90	90										
[°C]	-25	55	32	55	462,1	1578	397,7	1,32	4,51	1,14	350,2	2,12	5,75	**cecomaf LBP**
[°F]	-13	131	90	131										
[°C]	-35	40	20	40	352,8	1205	303,6	1,39	4,76	1,20	253,2	1,79	4,03	**EN12900 LBP**
[°F]	-31	104	68	104										
[°C]	-23	49	4,4	49	496,5	1696	427,3	1,41	4,83	1,22	351,0	2,13	6,88	**ARI540 LBP**
[°F]	-10	120	40	120										
[°C]	-23	41	32	32	663,8	2267	571,2	1,99	6,79	1,71	333,7	2,06	6,72	**AHAM LBP**
[°F]	-10	105	90	90										
[°C]	-35	45	32	45	337,5	1153	290,5	1,31	4,47	1,13	257,7	1,80	3,78	**opt**
[°F]	-31	113	90	113										

Performance tables R290, 220V/50Hz, eRSCR, fan 3m/s, VDE, CCC

	pe [°C]	pe [°F]	Cooling capacity [W]	Cooling capacity [Btu/h]	Cooling capacity [kcal/h]	COP [W/W]	EER [Btu/Wh]	EER [kcal/Wh]	P1 [W]	I [A]	m [kg/h]
[°C / °F]	-40	-40	255,5	873	219,9	1,18	4,02	1,01	217,0	1,66	2,86
cond. pressure	-35	-31	337,5	1153	290,5	1,31	4,47	1,13	257,7	1,80	3,78
pc= 45/113	-30	-22	430,9	1472	370,8	1,46	4,99	1,26	295,1	1,93	4,84
return gas temp.	-25	-13	539,3	1842	464,1	1,63	5,57	1,40	330,6	2,05	6,08
RGT= 32/90	-20	-4	666,1	2275	573,3	1,82	6,22	1,57	365,5	2,18	7,54
liquid temp	-15	5	815,0	2783	701,4	2,03	6,94	1,75	401,0	2,32	9,27
Tliq= 45/113	-5	23	1193,1	4075	1026,8	2,49	8,51	2,14	479,1	2,65	13,74
[°C / °F]	-40	-40	213,2	728	183,5	0,97	3,30	0,83	220,9	1,65	2,63
cond. pressure	-35	-31	286,1	977	246,3	1,08	3,67	0,93	265,9	1,81	3,54
pc= 55/131	-30	-22	367,9	1257	316,6	1,19	4,07	1,03	308,6	1,97	4,56
return gas temp	-25	-13	462,1	1578	397,7	1,32	4,51	1,14	350,2	2,12	5,75
RGT= 32/90	-20	-4	572,1	1954	492,4	1,46	4,98	1,26	392,0	2,28	7,16
liquid temp	-15	5	701,6	2396	603,8	1,61	5,51	1,39	435,2	2,45	8,82
Tliq= 55/131	-5	23	1033,1	3528	889,1	1,94	6,64	1,67	531,4	2,86	13,16